Uppgift 1 [0.5p]

Beräkna resistansen R.
Calculate the resistance R.

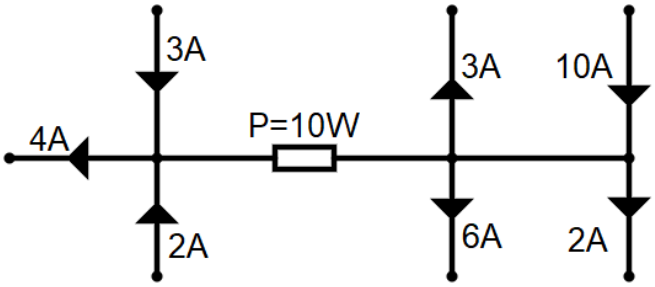

Svar:

I=-4+3+2=1A or I=-3-6+10-2=-1A (so there is 1A current that goes →)

$P=I^2*R$ or $R=P/I^2=10/1=10\Omega$

Uppgift 2 [1.5p]

Bestäm det totala resistansen i kretsen, om R_1=4Ω, R_2=1Ω, R_3=3Ω, R_4=2Ω, R_5=2Ω och R_6=1Ω.
Determine the total resistance in the circuit, if R_1=4Ω, R_2=1Ω, R_3=3Ω, R_4=2Ω, R_5=2Ω and R_6=1Ω.

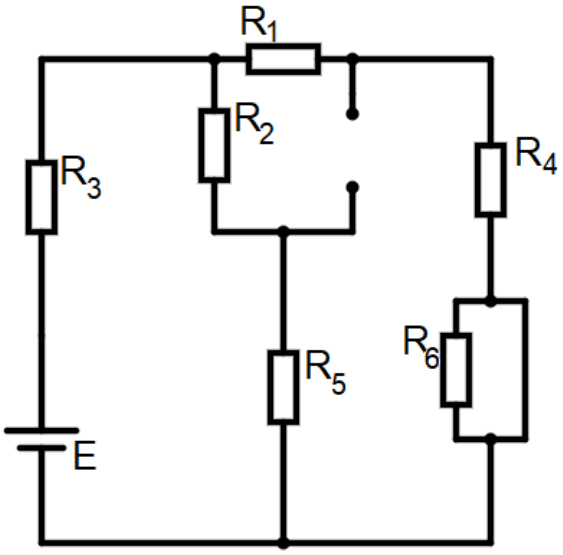

Svar:

R_6 is short-circuited.

$R_{total}=R_3+((R_2+R_5)//(R_1+R_4))=3+3//6=3+2=5\Omega$

Uppgift 3 [2p]

Bestäm strömmen genom resistorn R_4, om I_1=3A, I_2=6A, E=4V, R_1=5 Ω, R_2=7 Ω, R_3=1 Ω och R_4=6 Ω.
Determine the current through the resistor R_4, if I_1=3A, I_2=6A, E=4V, R_1=5 Ω, R_2=7 Ω, R_3=1 Ω and R_4=6 Ω.

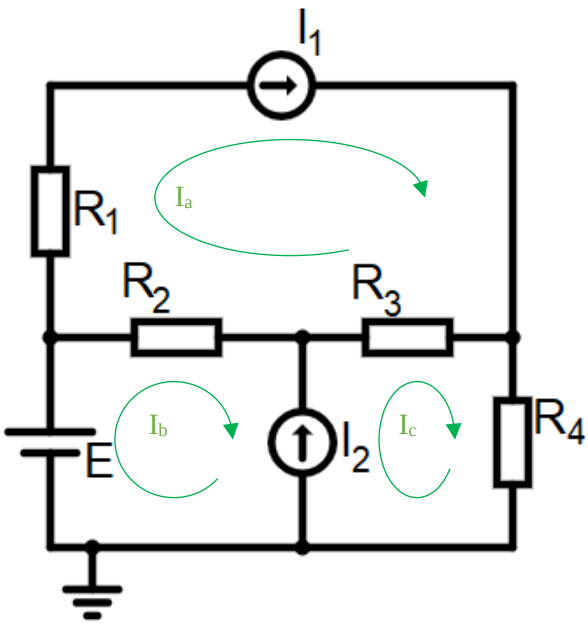

Svar:

$I_a=I_1=3A$

Current I_b and I_c are supermesh with $I_b-I_c=-6$

$E-R_2(I_b-I_a)-R_3(I_c-I_a)-R_4*I_c=0$

$4-7(I_b-I_a)-1(I_c-I_a)-6I_c=0$

$8I_a-7I_b-7I_c=-4$

$$\begin{cases} I_a = 3 \\ I_b - I_c = -6 \\ 8I_a - 7I_b - 7I_c = -4 \end{cases}$$

$I_a=3A$

$I_b=-1A$

$I_c=5A$

$I_{R5}=I_c=5A$

Uppgift 4 [2p]

Bestäm spänningsfallet över resistorn R_3, dvs. V_0, om R_1=6Ω, R_2=20Ω, R_3=4Ω, R_4=20Ω och E=60V.
Determine the voltage drop across resistor R_3, ie. V_0, if R_1=6 Ω, R_2=20 Ω, R_3=4 Ω, R_4=20 Ω, E=60V.

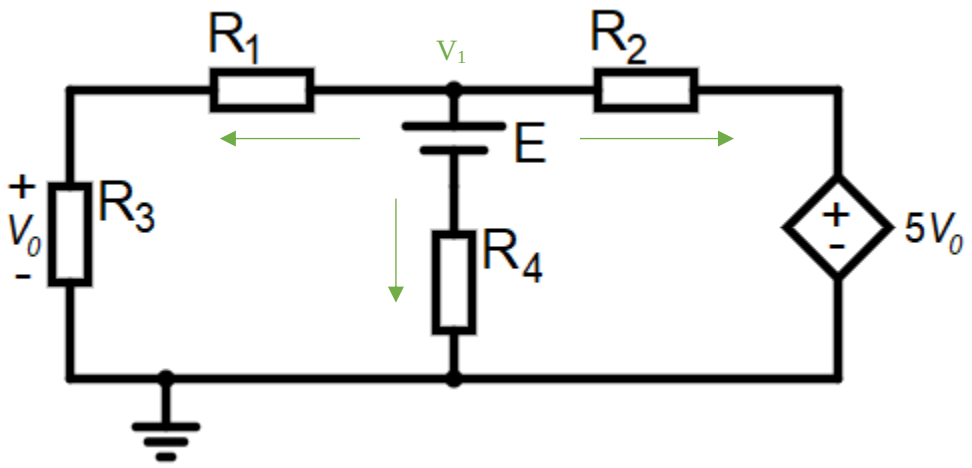

Svar:

$$-\frac{V_1}{R_1+R_3}-\frac{V_1-E}{R_4}-\frac{V_1-5V_0}{R_2}=0$$

$$V_0=R_3\frac{V_1}{R_1+R_3}=4\frac{V_1}{6+4}$$

$$-\frac{V_1}{R_1+R_3}-\frac{V_1-E}{R_4}-\frac{V_1-5*4\frac{V_1}{6+4}}{R_2}=0$$

$$-\frac{V_1}{10}-\frac{V_1-60}{20}-\frac{V_1-2V_1}{20}=0$$

$$-2V_1-V_1+60+V_1+1=0$$

$V_1=30\,V$

$$V_0=4\frac{30}{10}=12V$$

Uppgift 5 [3p]

Kretsarna A och B är ekvivalenta. E är 30V. Resistorerna R_1 är 12Ω och R_2 är 60Ω. Bestäm I_X och R_X i kretsen B.
Circuits A and B are equivalents. It is known that E is 30V, R_1 is 12Ω and R_2 is 60Ω. Determine I_X and R_X in the circuit B.

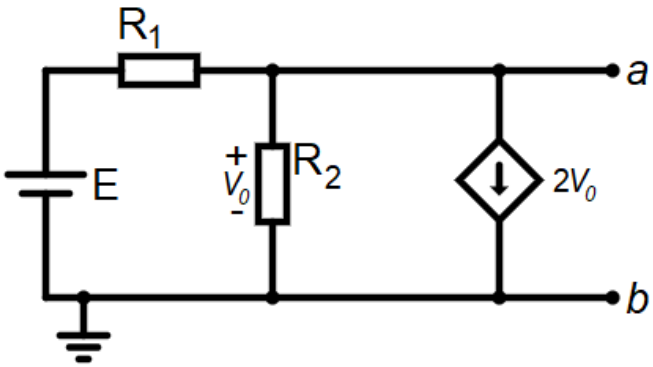

Krats A

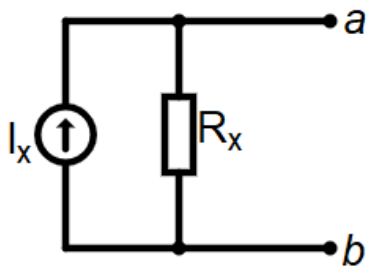

Krats B

Svar:

First, we will calculate R_{Th}. Since there is a dependent sources, we cannot remove it, but we can add a voltage source with 1V between the nodes a and b. In this case the final resistance will be 1V divided by a current on that added source (between a and b).

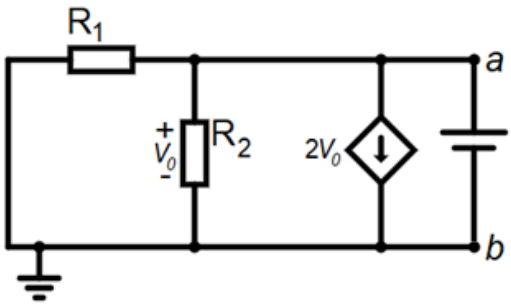

Since the added source is in parallel with both resistors: V_{R1}=1V, V_{R2}=1V. Because V_{R2}=1V, the depended current source gives 2A. Now we can calculate current on resistors: I_{R1}=1/12=0.083A and I_{R2}=1/60=0.017A. Since both resistors have higher polarity on the top, the current through resistors will go downwards (from node a to GRN). It means that at the GRN (or node b) I_{R1} is incoming, I_{R2} is incoming, current from the depended source is incoming, so current trough added voltage sources is outgoing and is equal 0.083+0.017+2=2.1A. Then R_{Th}=1/2.1=0.476Ω.

Now, we will find I_N. To do it, we short-circuit points a and b from the original circuit A. That means that V=0, that means that also V_{R1}=0V and because it is zero, then depended source is also zero. So, I=E/R_1=30/12= =2.5A.

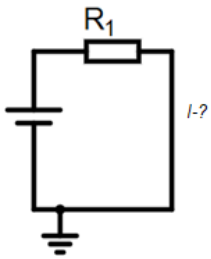

Because circuit B is a Norton's equation circuit for circuit A, Ix=2.5A and Rx=0.476 Ω